ACO Grease Separator LipuMax-P-B

Sectional view

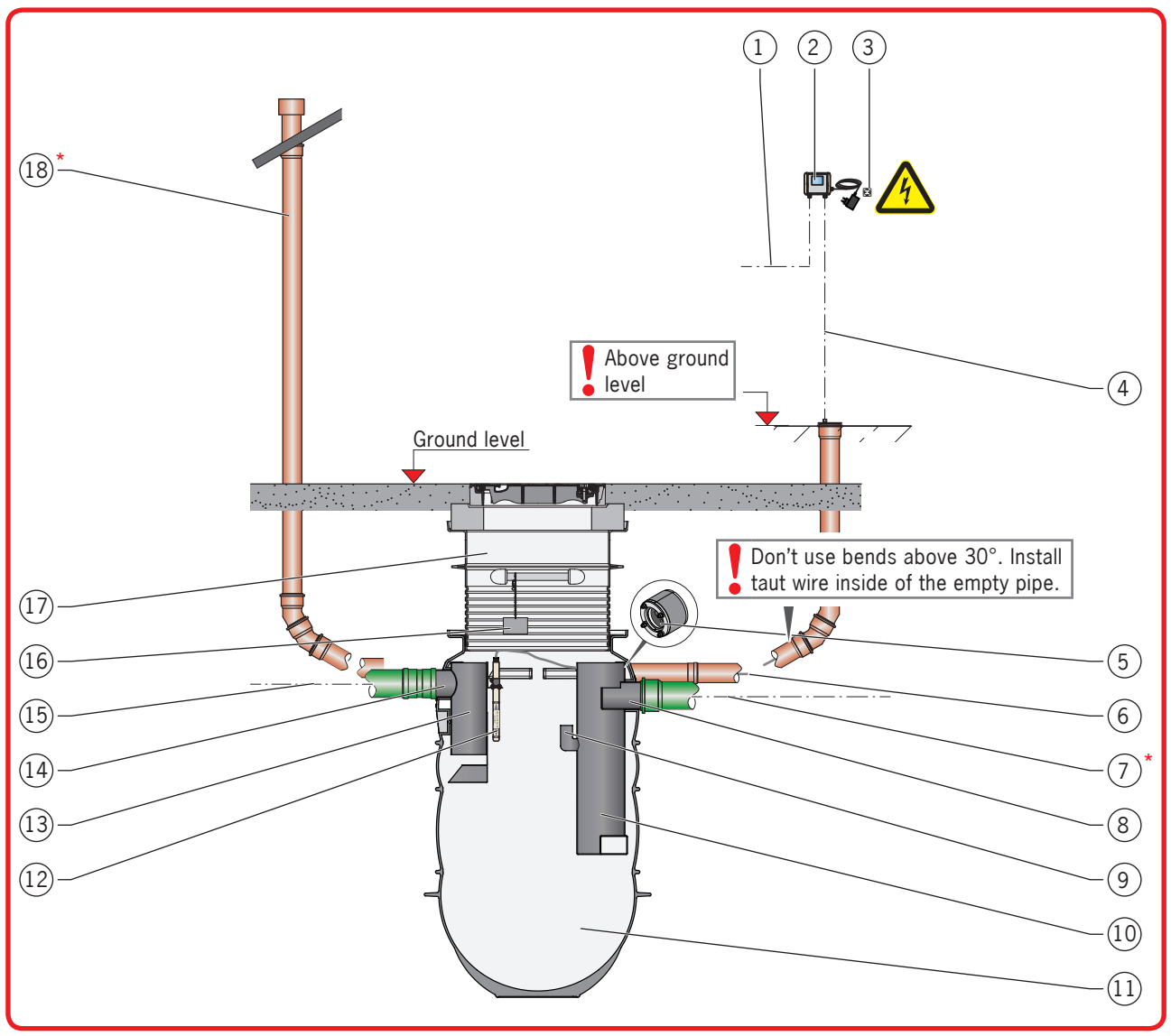

Top view

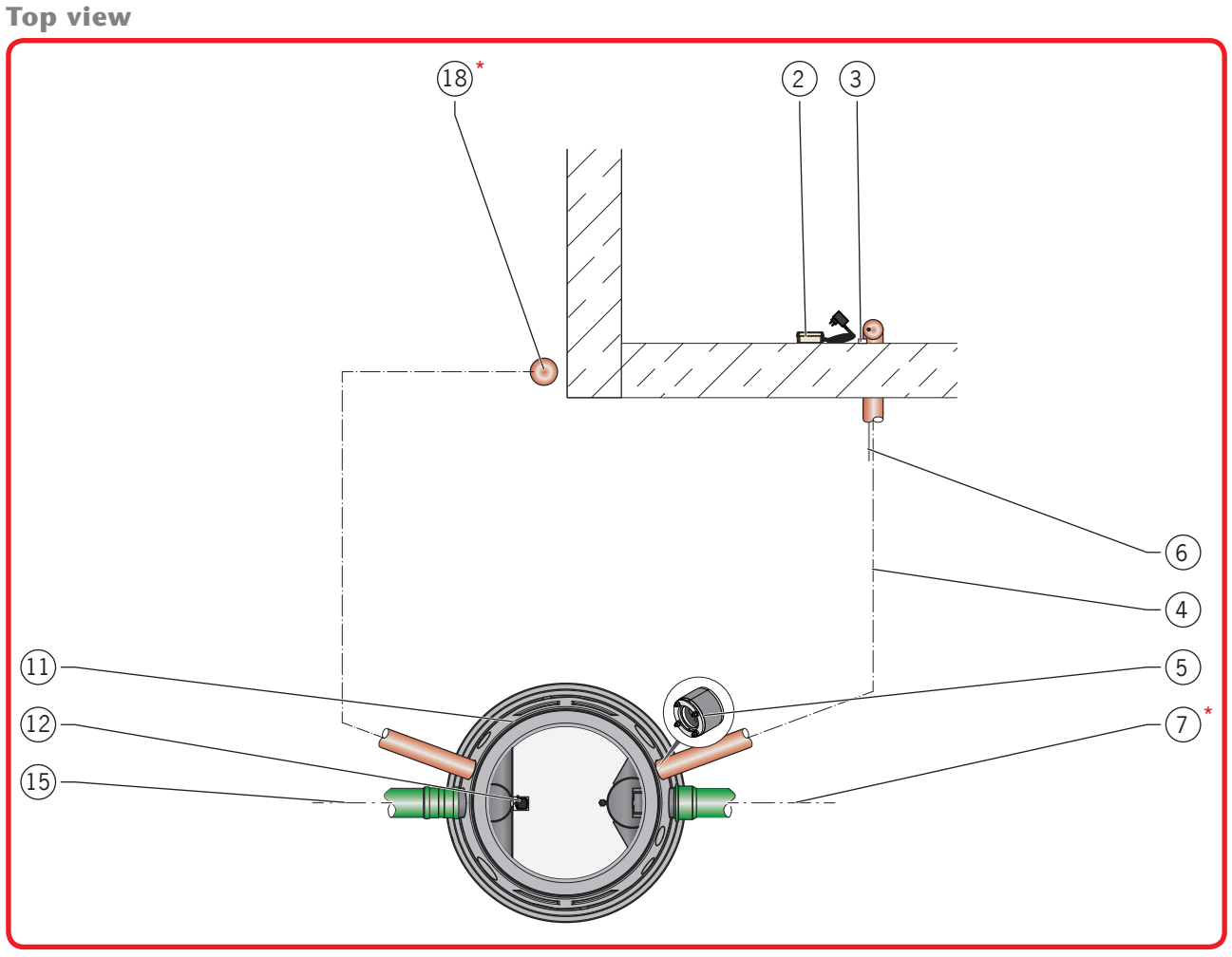

* Alternative variations of ventilation- and outlet piping, addition to installation prosposal.

For reason of a safety and proper application, please read carefully the instruction manual of the grease separator LipuMax-P-B and futher product documentation and store them until the product disposal. Make sure, that these documents are handed out to the end user.

Caption

Pos.	Component	Scope of delivery LipuMax-P-B	Optional by ACO	On-site
1	Electrical connection for forwarding procedural message malfunction			X
2	Grease level sensor with 3m connection cable and power supply		X	
3	Shockproof sockets 230V/50Hz			X
4	Supply pipe DN 100			X
5	Cable duct		X	
6	Connection cable (10m, 20m or 30m) grease level sensor		X	
7*	Outlet pipe			X
8	Nozzle for on site drainpipe	X		
9	Sampling device connection	X		
10	Outlet buffle	X		
11	Tank	X		
12	Grease level sensor		X	
13	Inlet buffle	X		
14	Inlet	X		
15	Inlet pipe			X
16	Type plate	X		
17	Raising system for load class A15, B125 or D400		X	
18*	Ventilation pipe DN 100			X

ACO Service
Im Gewerbepark 11c
36457 Stadtlengsfeld

Tel.: + 49 (0) 36965 819-444
Fax: + 49 (0) 36965 819-367
service@aco.com

ACO Grease Separator LipuMax-P-D

Sectional view

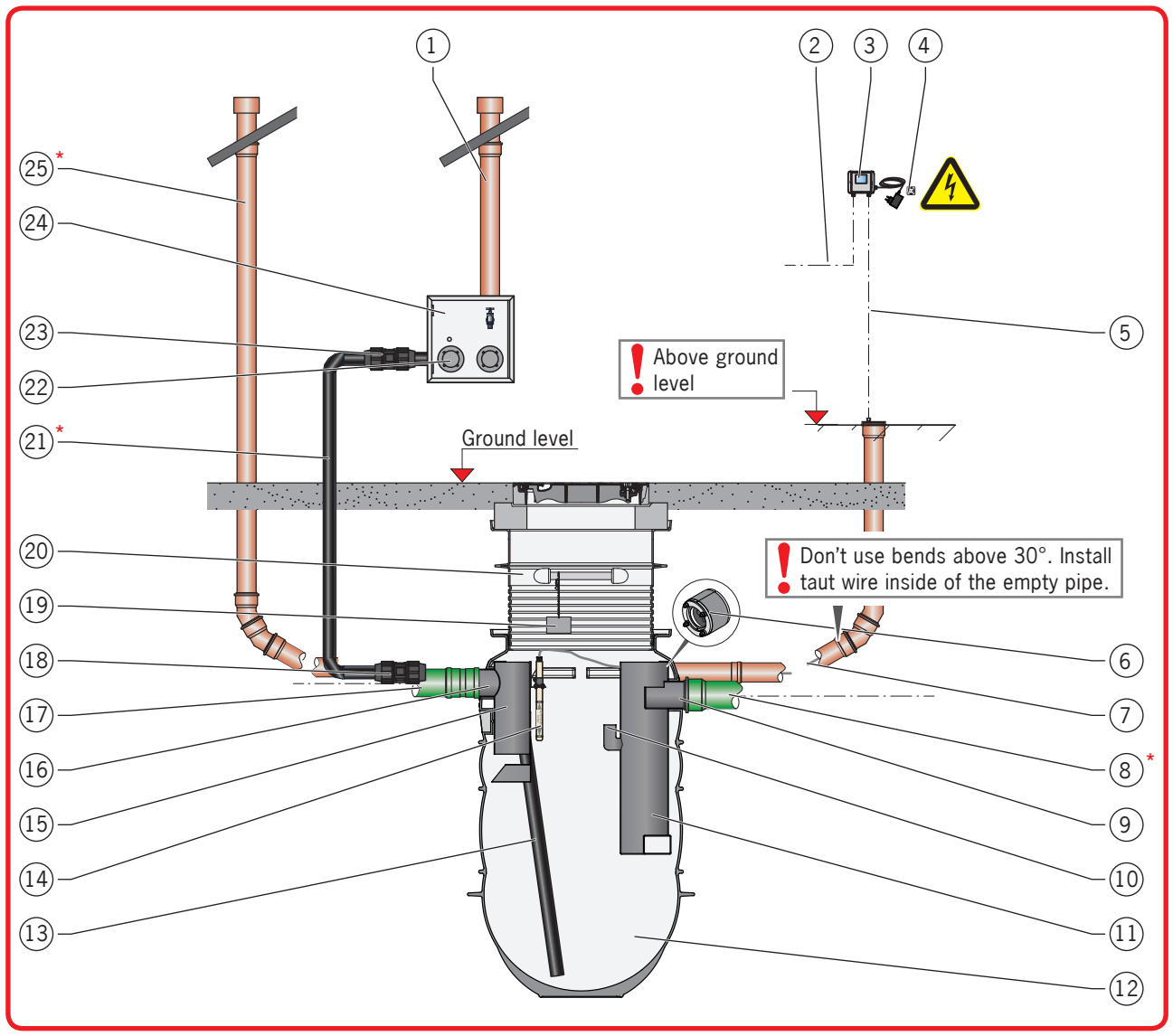

Top view

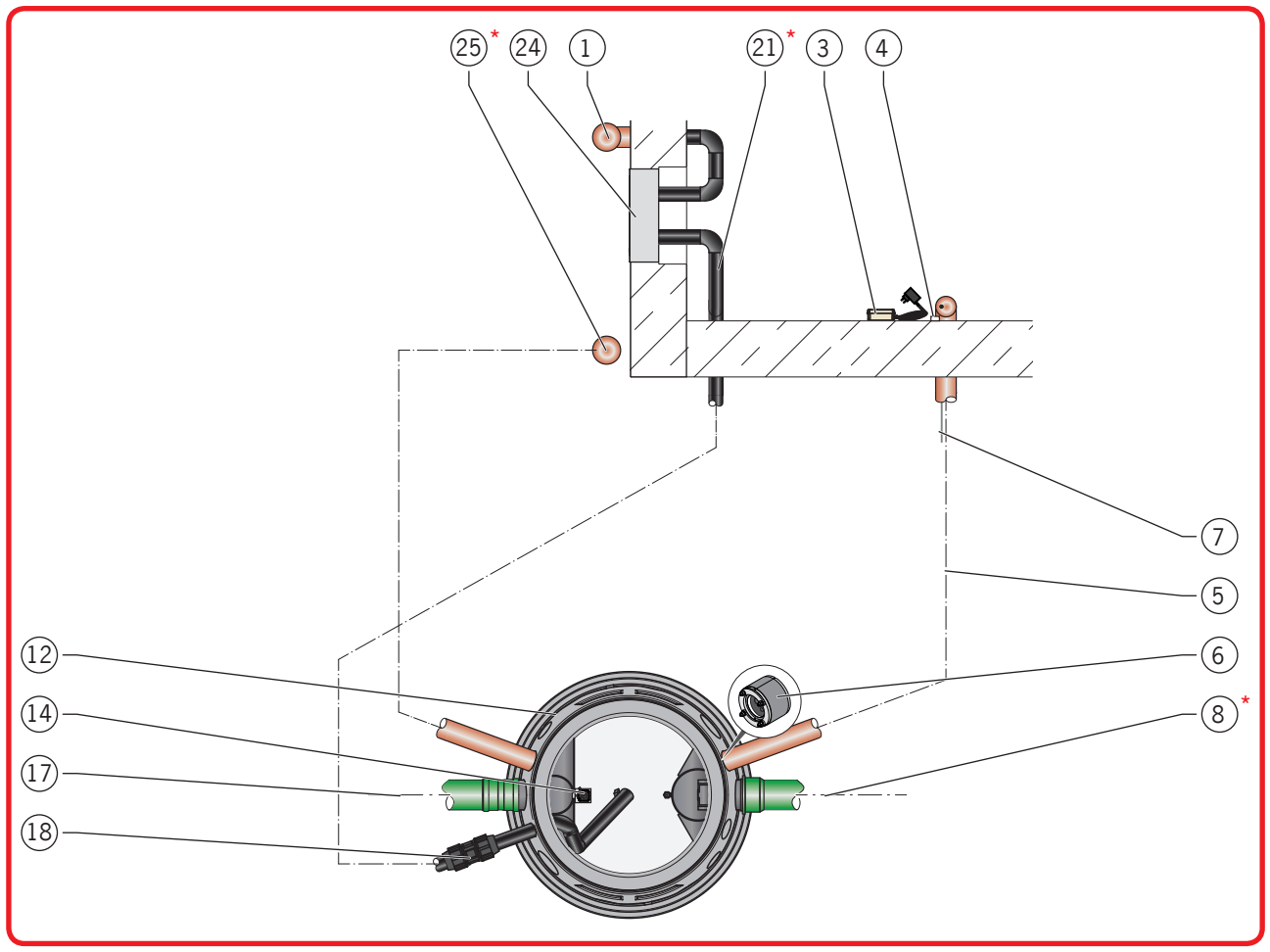

Caption

Pos.	Component	Scope of delivery LipuMax-P-D	Optional by ACO	On-site
1	Pump truck ventilation pipe DN 100 (optional)			X
2	Electrical connection for forwarding procedural message malfunction			X
3	Grease level sensor with 3m connection cable and power supply		X	
4	Shockproof sockets 230V/50Hz			X
5	Supply pipe DN 100			X
6	Cable duct		X	
7	Connection cable (10m, 20m or 30m) grease level sensor		X	
8*	Outlet pipe			X
9	Nozzle for on site drainpipe	X		
10	Sampling device connection	X		
11	Outlet buffle	X		
12	Tank	X		
13	Disposal pipe	X		
14	Grease level sensor		X	
15	Inlet buffle	X		
16	Inlet	X		
17	Inlet pipe			X
18	Compression fitting	X		
19	Type plate	X		
20	Raising system for load class A15, B125 or D400		X	
21*	Disposal pipe (min. DN 65)			X
22	Connection for disposal DN 65 (connection coupling with blind cover)	X		
23	Compression fitting	X		
24	Connection box		X	
25*	Ventilation pipe DN 100			X

* Alternative variations of ventilation-, outlet- and disposal piping, addition to installation prosposal.

For reason of a safety and proper application, please read carefully the instruction manual of the grease separator LipuMax-P-D and futher product documentation and store them until the product disposal. Make sure, that these documents are handed out to the end user.

ACO Service
Im Gewerbepark 11c
36457 Stadtlengsfeld

Tel.: + 49 (0) 36965 819-444
Fax: + 49 (0) 36965 819-367
service@aco.com

ACO Grease Separator LipuMax-P-DM

Sectional view

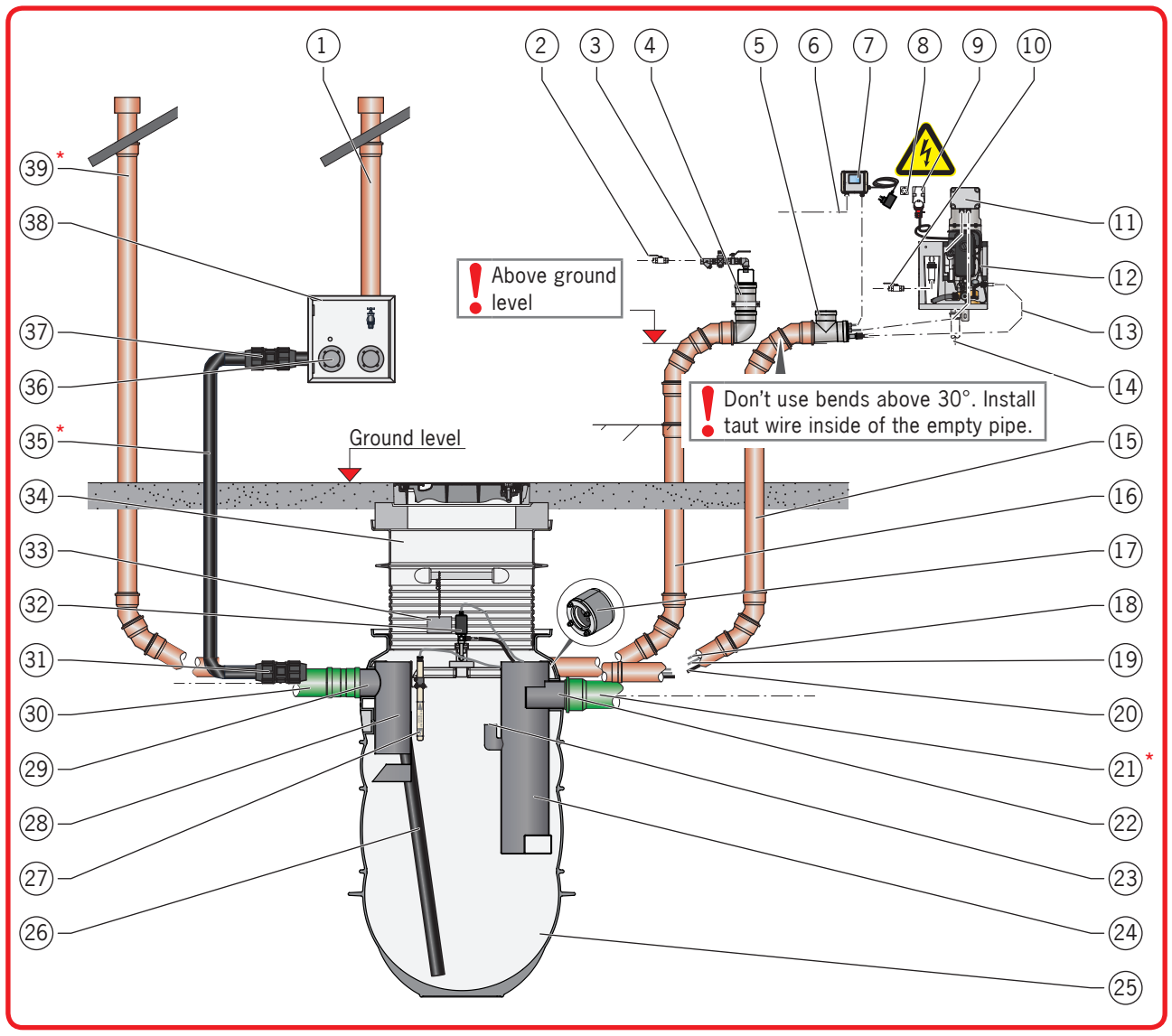

Top view

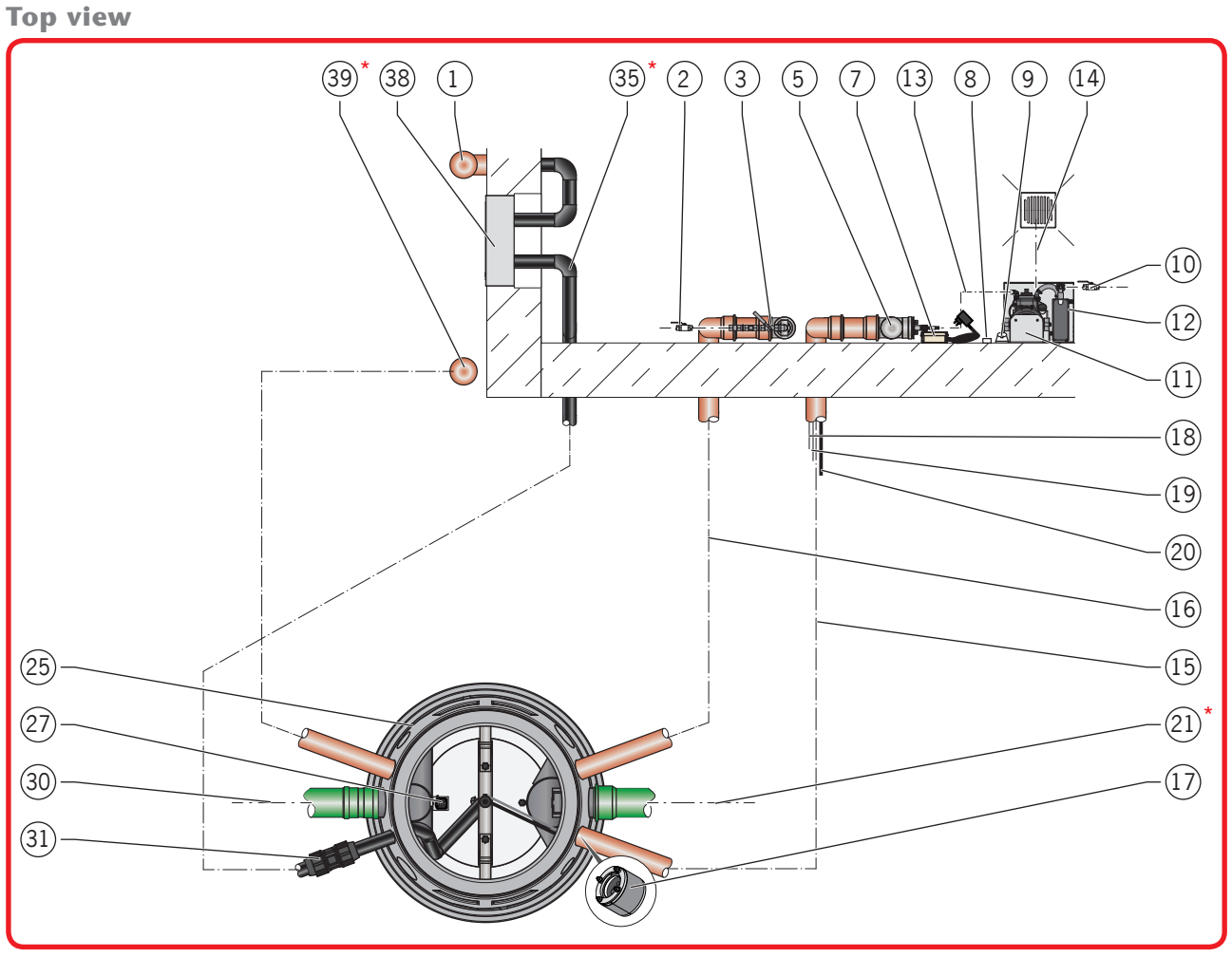

Caption

Pos.	Component	Scope of delivery LipuMax-P-DM	Optional by ACO	On-site
1	Pump truck ventilation pipe DN 100 (optional)			X
2	Cold water pipe ¾" filling unit			X
3	Filling device with ball valve	X		
4	Pipe parts DN 100 filling pipe with odour trap	X		
5	Pipe parts DN 100 supply pipe	X		
6	Electrical connection for forwarding procedural message malfunction			X
7	Grease level sensor with 3m connection cable and power supply		X	
8	Shockproof sockets 230V/50Hz			X
9	CEE socket 16A/400V/50Hz			X
10	Cold/warm water pipe ¾" HP unit			X
11	Small housing with switched-mode power supply	X		
12	High pressure unit (HP-unit) cleaning tank	X		
13	High pressure hose (2,7m)	X		
14	Drainpipe DN 50 HP-unit			X
15	Supply pipe DN 100			X
16	Filling pipe DN 100			X
17	Cable duct	X		
18	Connection cable (10m, 20m or 30m) grease level sensor		X	
19	Connection cable (30m) HP head	X		
20	High pressure hose (10m, 20m or 30m)		X	
21 *	Outlet pipe			X
22	Nozzle for on site drainpipe	X		
23	Sampling device connection	X		
24	Outlet buffle	X		
25	Tank	X		
26	Disposal pipe	X		
27	Grease level sensor		X	
28	Inlet buffle	X		
29	Inlet	X		
30	Inlet pipe			X
31	Compression fitting	X		
32	Electrical HP cleaning head	X		
33	Type plate	X		
34	Raising system for load class A15, B125 or D400		X	
35 *	Disposal pipe (min. DN 65)			X
36	Connection for disposal DN 65 (connection coupling with blind cover)	X		
37	Compression fitting	X		
38	Connection box		X	
39 *	Ventilation pipe DN 100			X

* Alternative variations of ventilation-, outlet- and disposal piping, 🕮 addition to installation prosposal.

For reason of a safety and proper application, please read carefully the instruction manual of the grease separator LipuMax-P-DM and futher product documentation and store them until the product disposal. Make sure, that these documents are handed out to the end user.

ACO Service
Im Gewerbepark 11c
36457 Stadtlengsfeld

Tel.: + 49 (0) 36965 819-444
Fax: + 49 (0) 36965 819-367
service@aco.com

Installation prosposal

Version: 2019–01–28

ACO Grease Separator LipuMax-P-DA

Sectional view

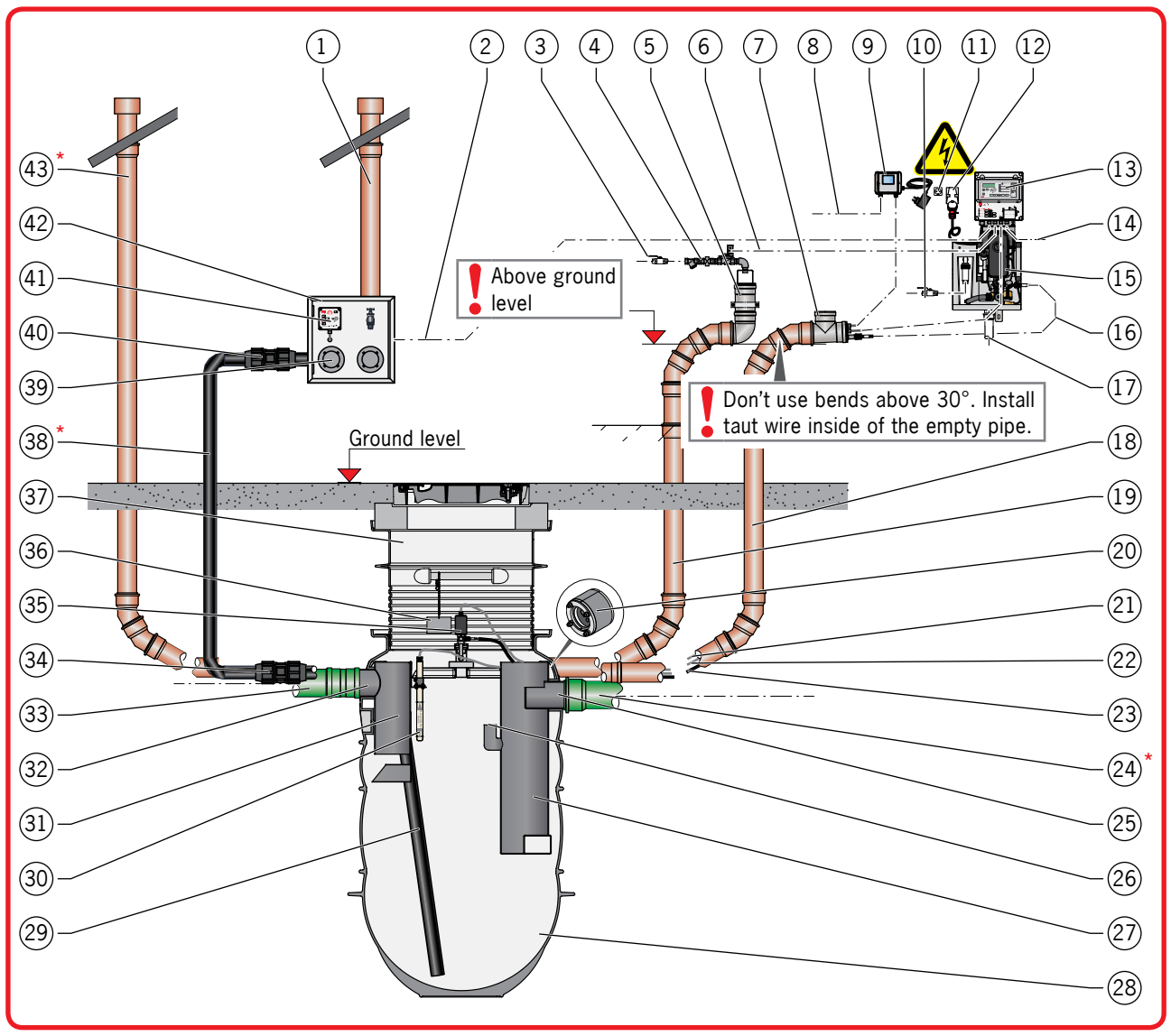

Top view

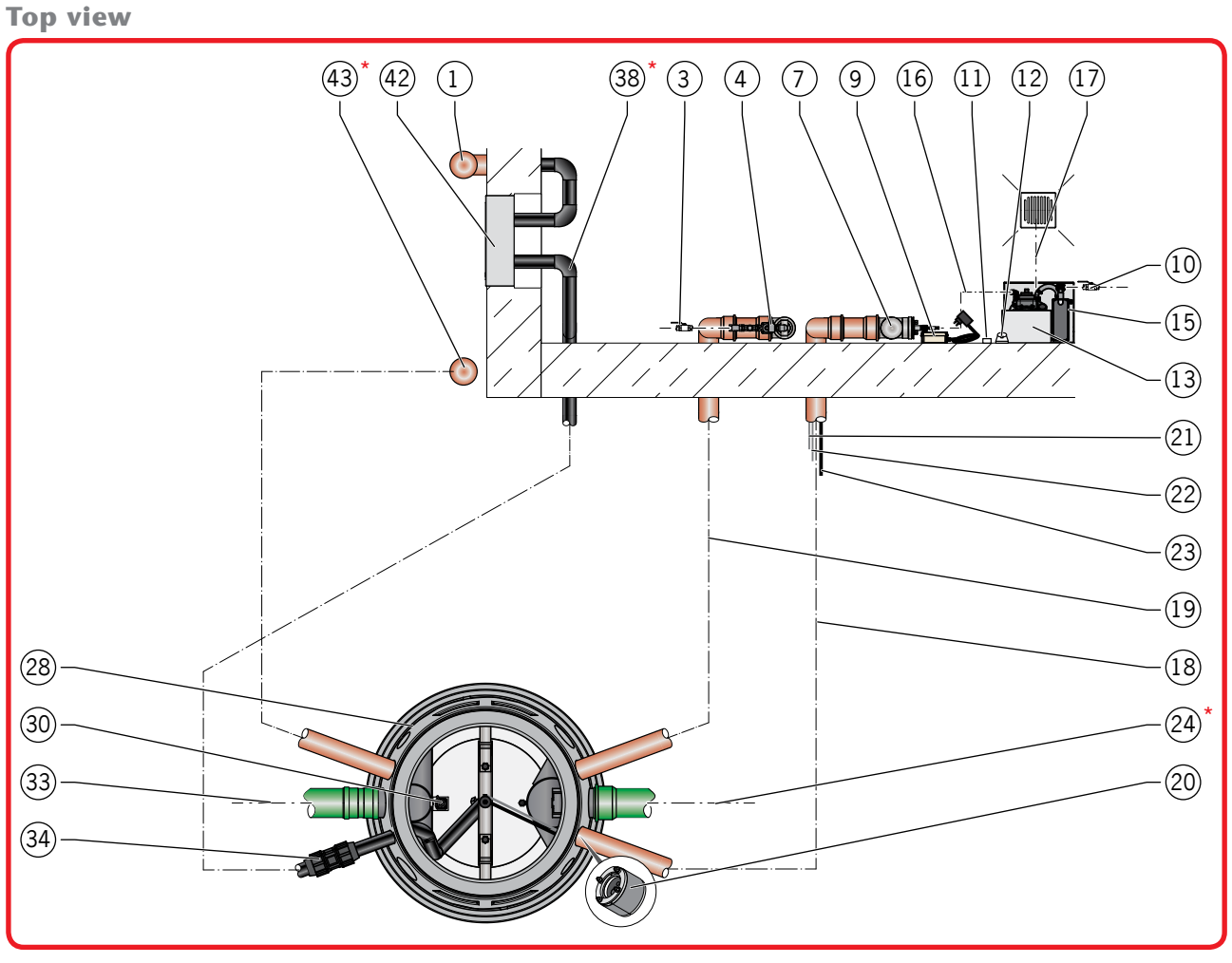

* Alternative variations of ventilation-, outlet- and disposal piping, 📖 addition to installation prosposal.

For reason of a safety and proper application, please read carefully the instruction manual of the grease separator LipuMax-P-DA and futher product documentation and store them until the product disposal. Make sure, that these documents are handed out to the end user.

Caption

Pos.	Component	Scope of delivery LipuMax-P-DA	Optional by ACO	On-site
1	Pump truck ventilation pipe DN 100 (optional)			X
2	Connection cable remote control			X
3	Cold water pipe ¾" filling unit			X
4	Filling unit with solenoid valve	X		
5	Pipe parts DN 100 filling pipe with odour trap	X		
6	Connection cable solenoid valve	X		
7	Pipe parts DN 100 supply pipe	X		
8	Electrical connection for forwarding procedural message malfunction			X
9	Grease level sensor with 3m connection cable and power supply		X	
10	Cold/warm water pipe ¾" HP unit			X
11	Shockproof sockets 230V/50Hz			X
12	CEE socket 16A/400V/50Hz			X
13	Control unit grease separator with 1,5m connection cable and CEE socket	X		
14	Connection cable for forwarding malfunction (optional)			X
15	High pressure unit (HP-unit) cleaning tank	X		
16	High pressure hose (2,7m)	X		
17	Drainpipe DN 50 HP-unit			X
18	Supply pipe DN 100			X
19	Filling pipe DN 100			X
20	Cable duct	X		
21	Connection cable (10m, 20m or 30m) grease level sensor		X	
22	Connection cable (30m) HP head	X		
23	High pressure hose (10m, 20m or 30m)		X	
24 *	Outlet pipe			X
25	Nozzle for on site drainpipe	X		
26	Sampling device connection	X		
27	Outlet buffle	X		
28	Tank	X		
29	Disposal pipe	X		
30	Grease level sensor		X	
31	Inlet buffle	X		
32	Inlet	X		
33	Inlet pipe			X
34	Compression fitting	X		
35	Electrical HP cleaning head	X		
36	Type plate	X		
37	Raising system for load class A15, B125 or D400		X	
38 *	Disposal pipe (min. DN 65)			X
39	Connection for disposal DN 65 (connection coupling with blind cover)	X		
40	Compression fitting	X		
41	Remote control	X		
42	Connection box		X	
43 *	Ventilation pipe DN 100			X

ACO Service
Im Gewerbepark 11c
36457 Stadtlengsfeld

Tel.: + 49 (0) 36965 819-444
Fax: + 49 (0) 36965 819-367
service@aco.com

ACO Grease Separator LipuMax-P

Variation 1: ventilation- and outlet piping

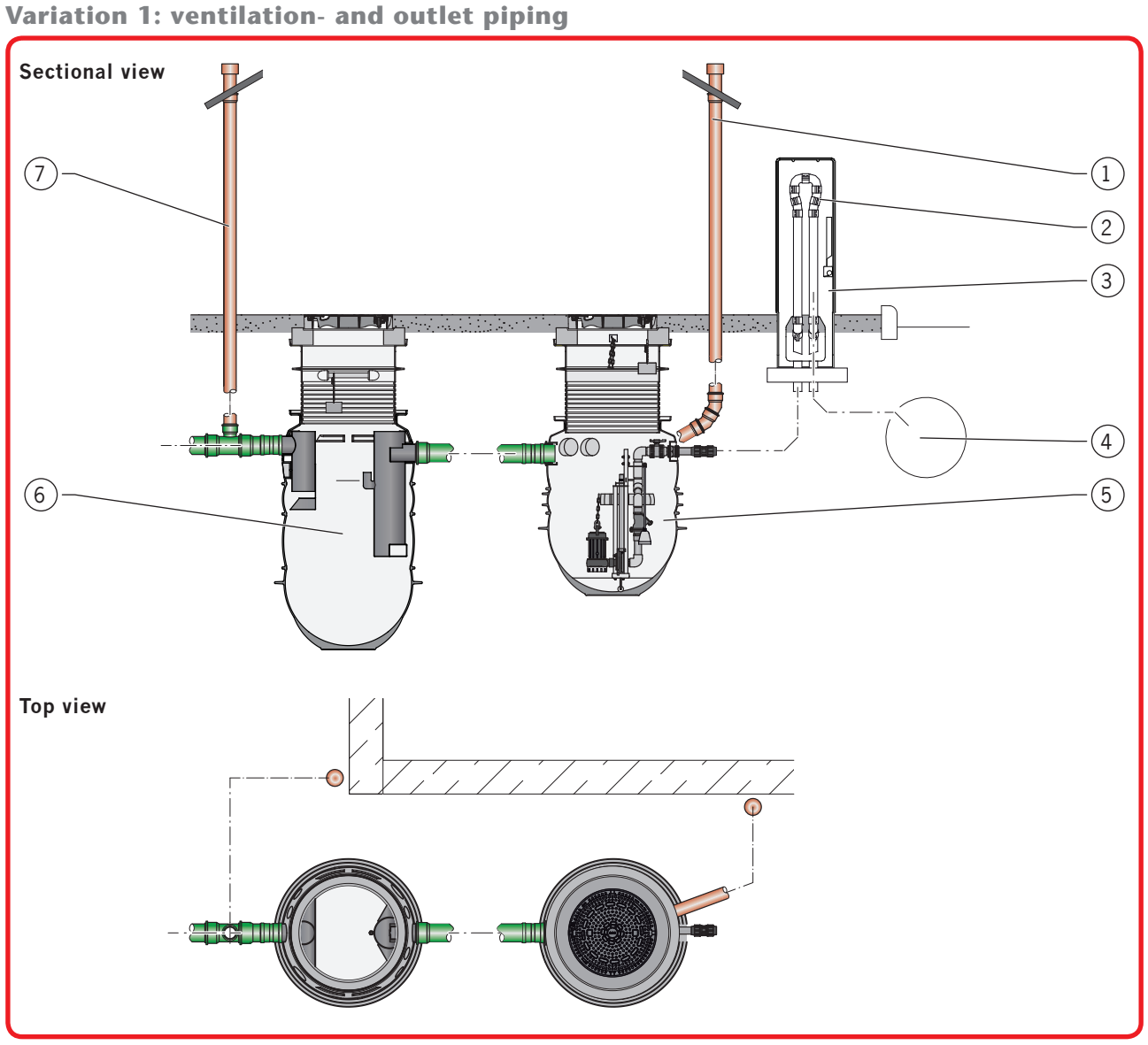

Caption

Pos.	Component	Scope of delivery LipuMax-P	Optional by ACO	On-site
1	Ventilation piping for pump station			X
2	Backflow loop			X
3	Weather proof cabinet		X	
4	Public sewer			
5	Pump station		X	
6	Lipumax-P-B, -D, -DM and -DA	X		
7	Ventilation pipe near by the inlet of the grease separator			X

Variation 2: disposal piping/ connection for disposal in street caps

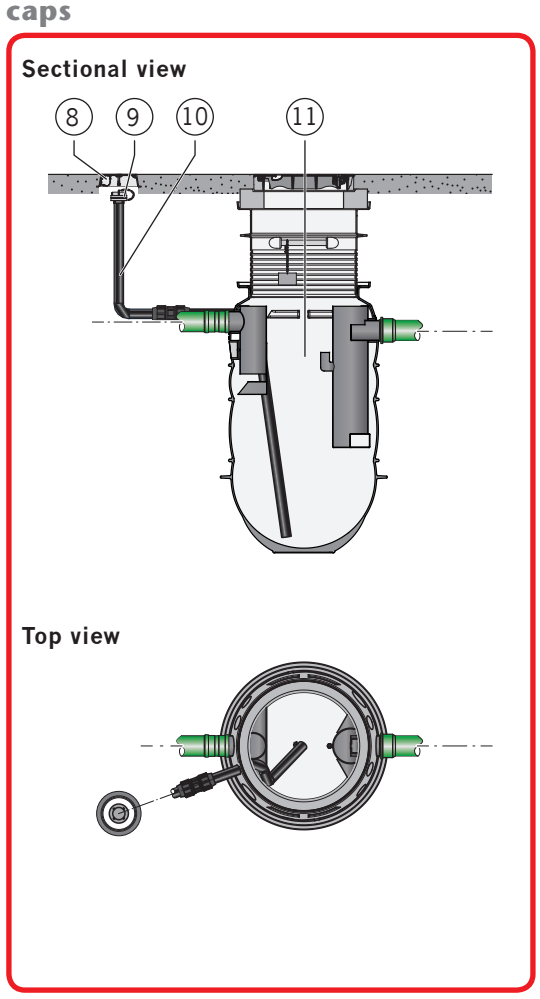

Variation 3: disposal piping/ connection for disposal in disposal shaft

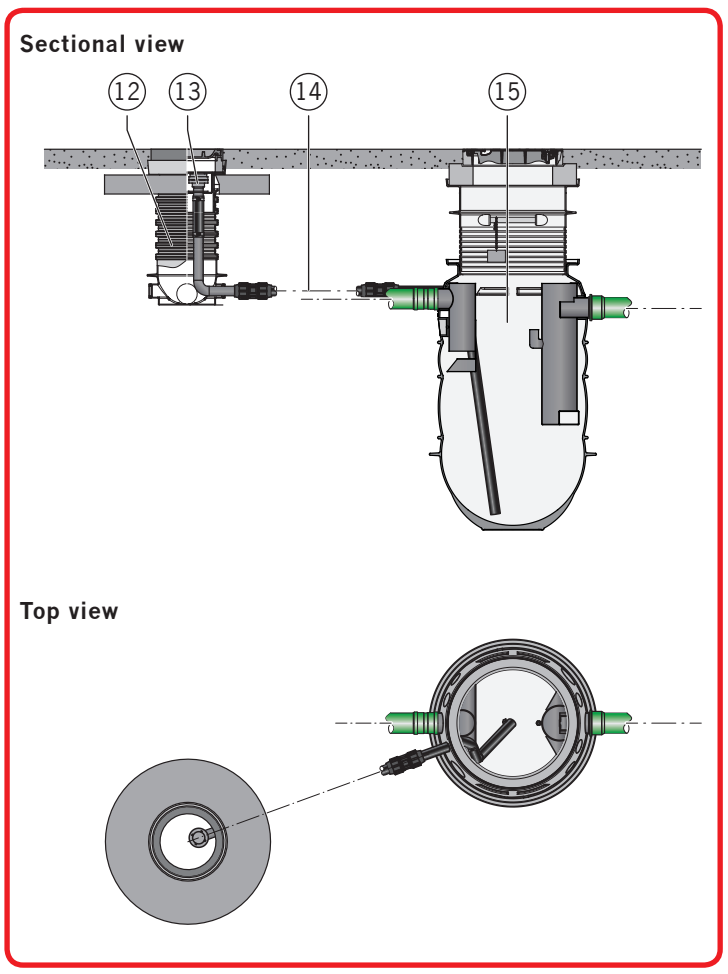

Caption

Pos.	Component	Scope of delivery LipuMax-P	Optional by ACO	On-site
8	Street caps		X	
9	Connection for disposal DN 65 (connection coupling with blind cover)	X		
10	Disposal piping			X
11	Lipumax-P-D, -DM and -DA	X		
12	Disposal shaft		X	
13	Connection for disposal DN 65 (connection coupling with blind cover)	X		
14	Disposal piping			X
15	Lipumax-P-D, -DM and -DA	X		

For reason of a safety and proper application, please read carefully the instruction manual of the grease separator LipuMax-P and futher product documentation and store them until the product disposal. Make sure, that these documents are handed out to the end user.

ACO Service
Im Gewerbepark 11c
36457 Stadtlengsfeld

Tel.: + 49 (0) 36965 819-444
Fax: + 49 (0) 36965 819-367
service@aco.com